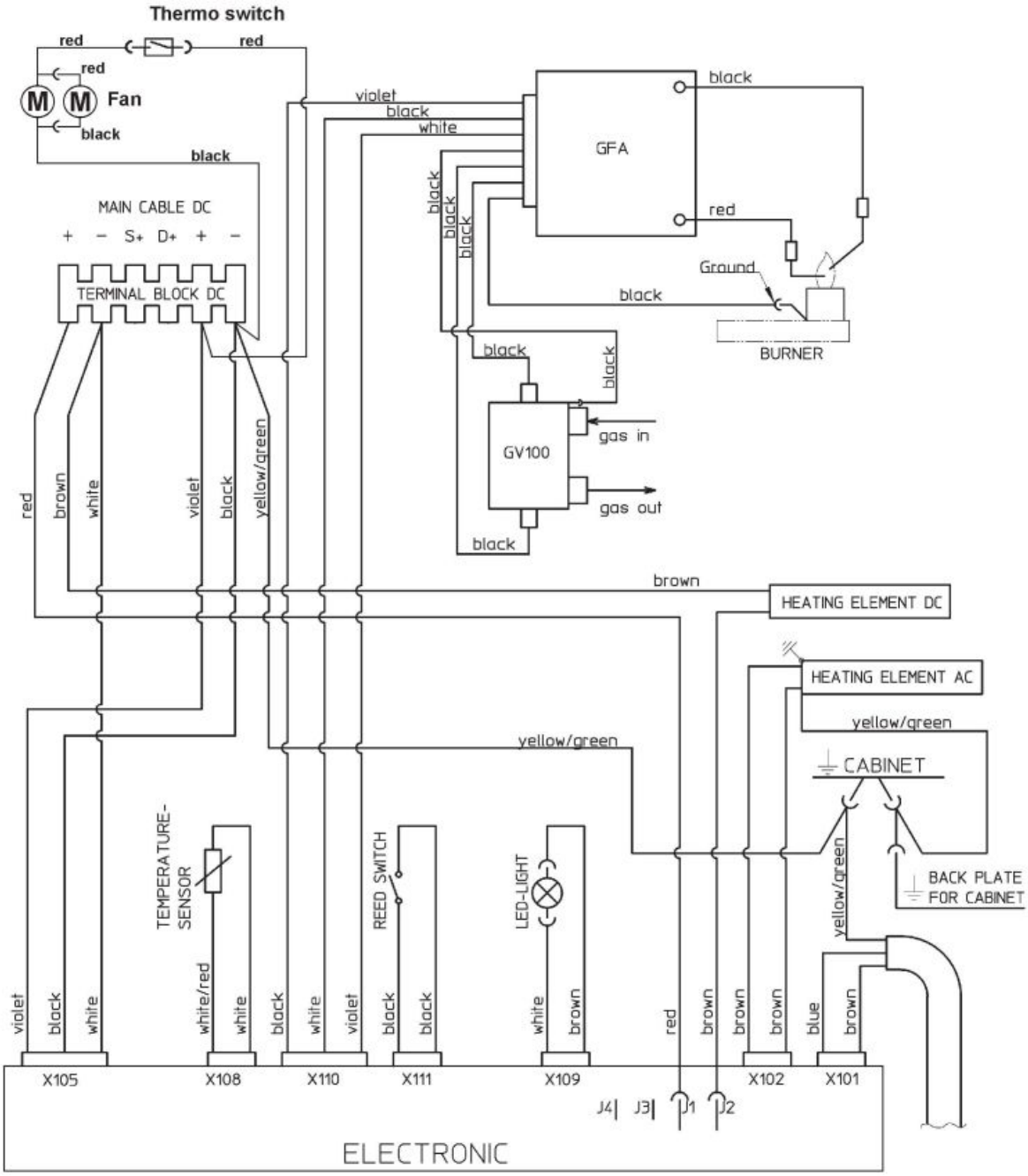
Thermo switch
red
red
red
Fan
black
black
MAIN CABLE DC
+ − S+ D+ + −
TERMINAL BLOCK DC
violet
black
white
GFA
black
red
Ground
black
BURNER
black
black
black
black
black
black
GV100
gas in
gas out
black
red
brown
white
violet
black
yellow/green
brown
HEATING ELEMENT DC
HEATING ELEMENT AC
yellow/green
yellow/green
CABINET
BACK PLATE
FOR CABINET
TEMPERATURE-
SENSOR
REED SWITCH
LED-LIGHT
violet
black
white
white/red
white
black
white
violet
black
black
white
brown
red
brown
brown
brown
blue
brown
X105
X108
X110
X111
X109
X102
X101
J4
J3
J1
J2
ELECTRONIC